# IEC Pin and Sleeve
# 100A, 3 PhaseY, 277/480V, 4 Pole, 5 Wire
## Corrosion Resistant Watertight Connector, Reverse Service

HUBBELL®

### Features
- UL Type 4X, 12 and IP69k environmental ratings
- Impact and corrosion resistant insulated non-metallic housing
- Watertight neoprene gland seal to prevent water ingress from entering at cable entrance
- Solid one-piece pins for reliable electrical contact
- Sequential contact engagement to prevent a momentary over-voltage

### Ordering Information

| Description | UPC Number | Catalog Number |
|---|---|---|
| Watertight IEC Pin and Sleeve Connector Body, Reverse service | 783585510088 | **M5100C7R** |

### Listings
UL Listed, File E146033

CSA Certified File LR280C

UL Classified to IEC 60309-1 IEC 60309-2

### Specifications

| | |
|---|---|
| Housing | PBT |
| Cord Clamps | PBT |
| Glands | Solid Neoprene |
| Contact Carrier | High-Impact Thermoset |
| Gaskets | Santoprene |
| Terminal Screws | Stainless Steel |
| Gaskets | Santoprene |
| Gaskets | Santoprene |

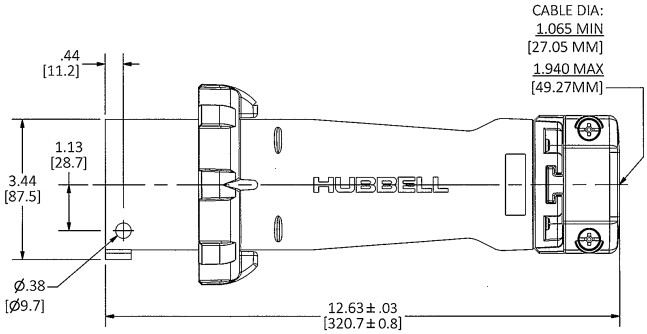


### Peformance

**Electrical**

| | |
|---|---|
| Current Interrupting | Certified for current interrupting at full rated current |
| Dielectric Voltage | Withstands 3,000V AC |
| Max. Working Voltage | 600V AC RMS |

**Mechanical**

| | |
|---|---|
| Impact Resistance | Per CSA C22.2, No. 182.1, UL 1682 |
| Product Identification | Identification and ratings are permanently fastened to the device housing |
| Terminal Identification | Terminals identified in accordance with North American and IEC conventions |

**Environmental**

| | |
|---|---|
| Flammability | V-0 |
| Ingress Protection | Type 3R, 3RX, 4X and IP68, IP69K |
| Moisture Resistance | IEC 60309-1 |
| Operating Temperature | Maximum Continuous 75°C; Minimum - 40°C w/o impact |

### Complementary Products
Cover Assemblies
Cord Clamp and Locking Ring
Liquidtight Adapters

### Online Resources
Customer Drawing
Installation Instructions

Hubbell Wiring Device-Kellems • Hubbell Incorporated (Delaware) • 40 Waterview Drive • Shelton, CT 06484 • Phone (800) 288-6000 • FAX (800) 255-1031
Printed in U.S.A. Specifications subject to change without notice.

HUBBELL®
Wiring Device-Kellems